ASSEMBLY INSTRUCTIONS

J00-031

MUST BE ASSEMBLED BY AN ADULT

21145261 HUTCH

Thank you for purchasing this quality product. Be sure to check all packing material carefully for small Hardware which may have come loose inside the carton during shipment. Identify and count all hardware and compare with the hardware list below.

Safety Notice

Hutch must be attached to the Desk to insure safe usage.

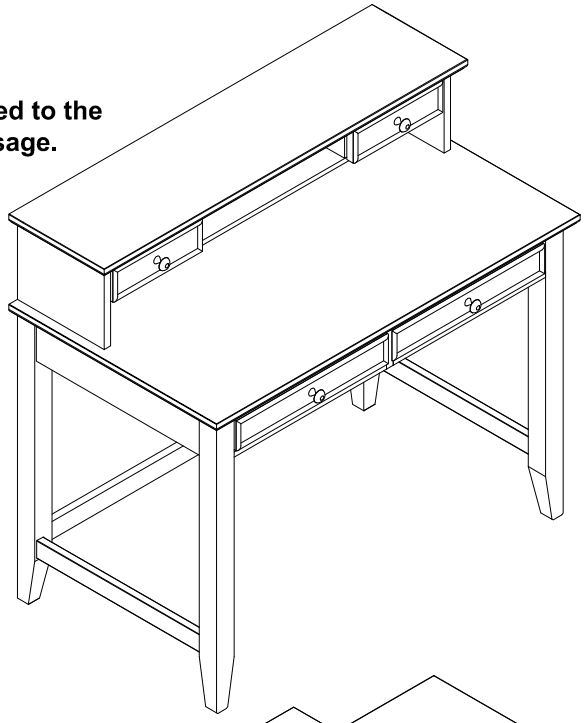

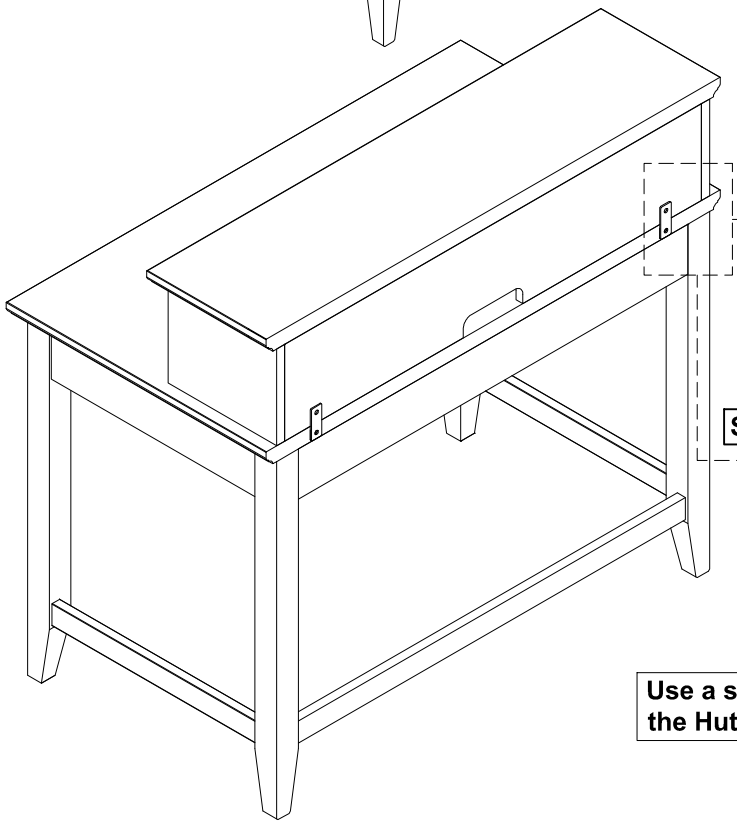

Step 2

Step 1

Install brackets as shown.

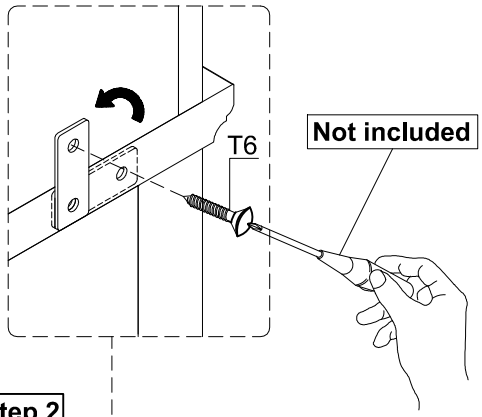

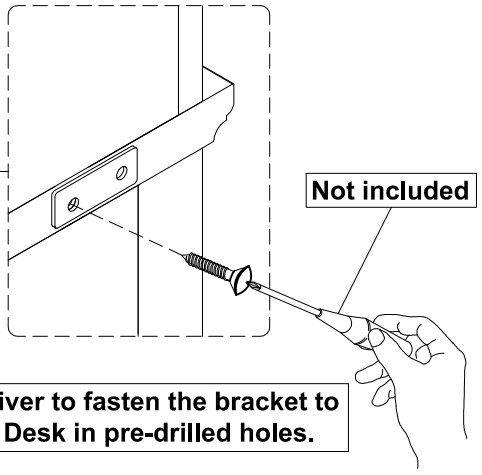

Use a screwdriver to fasten the bracket to the Hutch and Desk in pre-drilled holes.

HARDWARE LIST OF HUTCH

T1		SCREW	#6x5/8"	2Pcs

MADE IN VIETNAM